Italgroup®
HYDRAULIC MOTORS
ITALY

HIGH AND LOW SPEED RADIAL PISTON MOTORS

G SERIES / GD SERIES TECHNICAL CATALOGUE

G 20-27-34
G 50-75-90-100

GD 100

INDEX

Italgroup®
HYDRAULIC MOTORS
ITALY

MOTOR TECHNICAL DATA

G series — Single displacement motor

Model	G20	G27	G34	G50	G75	G90	G100
Displacement [cc/Rev]	20,5	27,3	34,2	50,9	76,3	89	102
Specific theoretical torque [Nm/bar]	0,32	0,43	0,54	0,81	1,21	1,41	1,61
Maximum speed [rpm]	2500	2500	2500	2400	2300	2200	2200
Minimum speed [rpm]	40	35	30	25	20	15	10
Mechanical efficiency [%]	84	87	88,5	88	89	89.2	89.5
Starting mechanical efficiency [%]	78	84	85,8	80	85	86	87
Continuous maximum power [kW]	10	14	17	25	35	42	48
Maximum power [kW]	12	17	21	31	44	52	60
Continuous maximum pressure [bar]	250	250	250	250	250	250	250
Intermittent maximum pressure [bar]	280	280	280	280	280	280	280
Peak pressure [bar]	350	350	350	350	350	350	350
Dry weight	19	19	19	25	25	25	25
Recommended flushing flow [l/min]	3	3	3	3	5	5	5

GD series — Dual displacement motor

Max displacement [cc/Rev]	100	89	76,3	63,6	50,3
Specific theoretical torque [Nm/bar]	1,61	1,41	1,21	1,01	0,81
Maximum speed [rpm]	1850	1900	2000	2100	2300
Minimum speed [rpm]	10	15	20	25	25
Mechanical efficiency [%]	89.5	89.2	89	88.5	88
Starting mechanical efficiency [%]	87	86	85	82	80
Continuous maximum power [kW]	48	42	35	31	25
Maximum power [kW]	60	52	44	39	31
Continuous maximum pressure [bar]	250	250	250	250	250
Intermittent maximum pressure [bar]	280	280	280	280	280
Peak pressure [bar]	350	350	350	350	350
Dry weight	25	25	25	25	25
Recommended flushing flow [l/min]	5	5	5	5	3

Min displacement [cc/Rev]	50,3	38	31
Specific theoretical torque [Nm/bar]	0,81	0,6	0,49
Maximum speed [rpm]	2300	2350	2400
Minimum speed [rpm]	25	30	30
Mechanical efficiency [%]	88	85	83
Starting mechanical efficiency [%]	80	75	45
Continuous maximum power [kW]	25	18	15
Maximum power [kW]	31	23	19
Continuous maximum pressure [bar]	250	250	250
Intermittent maximum pressure [bar]	280	280	280
Peak pressure [bar]	350	350	350
Dry weight	25	25	25
Recommended flushing flow [l/min]	3	3	3

The G & GD motors are radial piston hydraulic motors that can be used for different applications, both general and specific ones. The G & GD series is characterized by high speed, high volumetric efficiency and high starting torque. G & GD motors can be used for both mobile and industrial applications, we can supply them in complete groups, together with gearboxes and negative brakes. Special features like high pressure bidirectional shaft seals and special treatment on motors can be performed. Please contact Italgroup technical department for more information.

Italgroup®
HYDRAULIC MOTORS
ITALY

HYDRAULIC FLUIDS RECOMMENDATIONS

HYDRAULIC FLUIDS

We recommend the use of hydraulic oils with anti-wear additives (ISO HM or HV) and minimum viscosity index of 95. Once normal working temperature is reached, oil viscosity must be at least 44 cSt, preferably in the range from 50 to 80 cSt.
Hydraulic oils meeting Denison MF-O, Vickers M-2952-S I - 286-S performance requirements and DIN 51524 specifications, are preferred.
Pay particular attention if you use HE type oils (ecological fluid) because them can influence the motor seals compatibility, the motor performance and life. Please ask us for advice in case of HE type oils usage.
Mineral hydraulic oils are divided into four main types, designated by the International Standards Organisation (ISO) as HH, HL, HM and HV. We advise to use only products with HM or HV specifications.
HM type
These are the most widely employed hydraulic oils. They include small quantities of anti-wear additives to provide significant improvement in wear reduction. "Superior" quality HM type oils can be used for all equipment, with the added assurance that they will be suitable for the highest temperature.
HV type
HV hydraulic oils show minimal change in viscosity with temperature variations.

OIL VISCOSITY RECOMMENDATION

Room temperature HM type ISO-VG

- -20°C / 0°C BP ENERGOL HLP - HM 22
- -15°C /+5°C BP ENERGOL HLP - HM 32
- -8°C /+15°C BP BNERGOL HLP - HM 46
- 0°C /+22°C BP ENERGOL HLP - HM 68
- +8°C /+30°C BP ENERGOL HLP - HM100
- -20°C /+5°C BP BARTRAN HV 32
- -15°C /+22°C BP BARTRAN HV 46
- 0°C /+30°C BP BARTRAN HV 68

Our motors have been designed to work also with:

- oils type ATF (Automatic Transmission Fluid)
- oils with viscosity SAE 10W - 20 -30
- multigrade motor oils SAE 10 W/40 or 15 W/40
- universal oils

During cold start-up, avoid high-speed operation until the system is warmed up to provide adequate lubrication.
Continuous working temperature must not exceed 70°C.

FIRE RESISTANT OIL LIMITATIONS

	Max cont. pressure	Max int. pressure	Max speed
HFA, 5-95% oil-water	103	138	50%
HFB, 60-40% oil-water	138	172	100%
HFC, water-glycol	103	138	50%
HFD, ester phosphate	250	293	100%

FILTRATION

Hydraulic systems oil must always be filtered.
The choice of filtration grade derives from needs of service life and money spent. In order to obtain stated service life it is important to follow our recommendations concerning filtration grade.
When choosing the filter it is important to consider the amount of dirt particles that filter can absorb and still operate satisfactorily. For that reason we recommend filters showing when you need to substitute filtering cartridge.
According to NAS 1628, we recommend:

- maximum permissible oil contamination degree according to NAS 1628 class 9 (using filters with minimum efficiency $\beta_{10}=100$), for normal service life;
- maximum permissible oil contamination degree according to NAS 1628 class 8 (using filters with minimum efficiency $\beta_5=100$), for closed circuit applications and long service life.

OXIDATION

Hydraulic oil oxidizes with time of use and temperature. Oxidation causes changes in colour and smell, acidity increase or sludge formation in the tank. Oxidation rate increases rapidly at surface temperatures above 60°C, in these situations oil should be checked more often. Every 5-8°C of increase from the optimum working temperature, the hydraulic fluid life decrease of about 40-50%.
The oxidation process increases the acidity of the fluid; the acidity is stated in terms of the "neutralization number". Oxidation is usually slow at the beginning and then it increases rapidly.
A sharp increase (by a factor of 2 to 3) in neutralization number between inspections shows that oil has oxidized too much and should be replaced immediately.

WATER CONTENT

Oil contamination by water can be detected by sampling from the bottom of the tank. Most hydraulic oils repel the water, which then collects at the bottom of the tank. This water must be drained off at regular intervals. Certain types of transmission oils and engine oils emulsify the water; this can be detected by coatings on filter cartridges or a change in the colour of the oil. In such cases, obtain your oil supplier advice.

DEGREE OF CONTAMINATION

Heavy contamination of the oil causes wear rising in hydraulic system components. Contamination causes must be immediately investigated and remedied.

ANALYSIS

In optimum operating conditions, we recommend to perfor an oil analysis 6 months. The analysis should cover viscosity, oxidation, water content, additives and contamination. Most oil suppliers are equipped to analyze oil state and to recommend appropriate action. Oil must be immediately replaced if the analysis shows that it is exhausted.

Italgroup®
HYDRAULIC MOTORS
ITALY

INSTRUCTIONS AND ADVICES

INSTALLATION

Hoses and piping must be clean and free from contamination. The motor must be fitted on a flat, robust surface using the right bolts (see the following table for your reference).

Motor	Bolts	Bolts preload
G / GD series	M8	20÷30 Nm

The clearance between the motor flange diameter and the mounting diameter must not exceed a maximum value that can be set approximatively to 0.15 mm. In special working conditions, in wich the motor is operating with frequent reversing, high speed running, vibrations, and shock loadings, high tensile stress fixing bolts must be used, whereas one must be included as fitting bolt.
In the case in wich the motor is coupled in a rigid way to a shaft having indipendent bearings, the two shafts must be aligned in the way to have a maximum error of about 0.1 mm.

- Motor can be mounted in any position (refer to drain recommendations to obtain more detailed guidelines)
- In run-away conditions you must use counterbalance valves
- Consult factory for intermittent applications

Splined adaptors (spline billets) are available upon request.

INSTALLATION CIRCUIT

The choice of open or closed loop circuit will be determined by the application.
Open loop circuits are cheaper and simpler to install.
Closed loop circuit is a superior circuit and usually takes up less space. It also offers better control features. In case of using closed loop circuit please contact Italgroup technical department.

START UP

Motor case and pistons must be completely filled with oil before starting. Do not load motor to maximum working pressure. Increase load gradually at start-up. When it is possible, a short "running in" period of 30 minutes is higly recommended (for GD series, this operation must be performed keeping the motor in maximum displacement).

CASE DRAIN – CASE PRESSURE

Referring to drain pipes, the recommended minimum size for pipe lengths up to about 5 m is 12 mm as internal diameter. If the drain pipes are longer, the internal bore drain pipe diameter must be increased by consequence. Keep the pipe length always at the minimum possible value, connecting the case drain directly to tank.
The case drain port on the motor must be located on the highest point of the installation to ensure that the motor will always be full of oil. Italgroup G and GD motors are equipped with high pressure shaft seal: refer to the "shaft seal features" page for the maximum continuous case pressure estimation. Italgroup performed internal tests that shows that the case pressure can be up to 10 bar continuous and 15 bar intermittent without causing damage to the shaft seal. Especially in the case in wich the drain line is quite long, a relief valve is recommended to prevent the shaft seal damage.

IMPORTANT

When the motor is installed vertically with shaft pointing upwards, consult our Technical Department. If the motor is connected to high inertial loads, the hydraulic system must be designed to prevent peaks of pressure and cavitation.

TEMPERATURE

Refer to hydraulic fluid recommendations.

VISCOSITY

Refer to hydraulic fluid recommendations.

HIGH PRESSURE APPLICATIONS

In case of high pressure applications, a Nitemper treatment on motor body it is suggested to increase wear and tear resistance.

BACK PRESSURE

Don't exceed 70 bar back pressure. A small return line back pressure between 2 and 5 bar is recommended in some cases to attenuate the liquid born noise level. In addition the back pressure counteract the centrifugal forces in the motor. Please notice that the back pressure reduces the effective motor ouptut torque.

BOOST PRESSURE

When the motor runs at a speed that can cause pumping effects, a positive pressure it is needed at the motor ports. The minimum required pressure at the motor ports can be estimated basing on different parameters, using the following formula:

$$p = 1 + p_c + C_H n^2 V^2$$

Where p is the boost pressure, p_c the case pressure, n the rotation speed, V the motor displacement, and C_H is a constant, depending by the motor serie.

Motor	C_H
G 20-27-34	$0{,}25*10^{-9}$
G 50-75-90-100	$0{,}28*10^{-9}$
GD 100	$0{,}28*10^{-9}$

MINIMUM SPEED

The minimum acceptable speed depends by different variables, like load inertia, motor displacement, system leakages, etc… For indicative values refer to motor technical data. For GD series, when it is possible, always start the motor in high displacement, to avoid start-up problems.

GD SERIES - DISPLACEMENT CHANGE

The displacement change can be performed in different ways. The user can use an internal or esternal pilot. To perform the displacement change, the pilot pressure must be at least 2/3 of the motor working pressure. If the motor working pressure is less than 3,5 bar, the pilot pressure must be at least 3,5 bar. Please note that in freewheeling operation it is necessary supply the displacement control mechanism with an external supply pressure/flow source. This external supply source will assure that the motor displacement during the freewheeling operation remains fixed at the minimum value, avoiding GD motor damage.

Italgroup®
HYDRAULIC MOTORS
ITALY

The oil flow rate required to perform the displacement change can be estimated in function of many different parameters; the most important factor that determinate the required flow rate is the motor case internal leakage. The flow rate that is shown in the next table must be considered as an indicative value that depends by many system parameters and working conditions.

Motor	Required flow rate	Displacement change delay
GD 100	5 l/min	0,2 s

The system components (pumps, motors...) present tear and wear phenomenons that are clearly variables during the system life, so the required flow rate is variable during the motor life, this variation is very difficult to estimate: for this reason the values reported must be considered as approximated and indicative values.

DISPLACEMENT CHANGE HYDRAULIC CIRCUIT

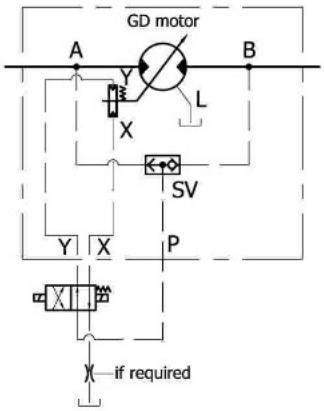

Internal pilot supply
(with shuttle valve SV included)

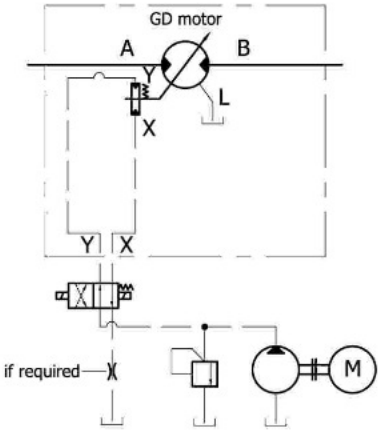

External pilot supply

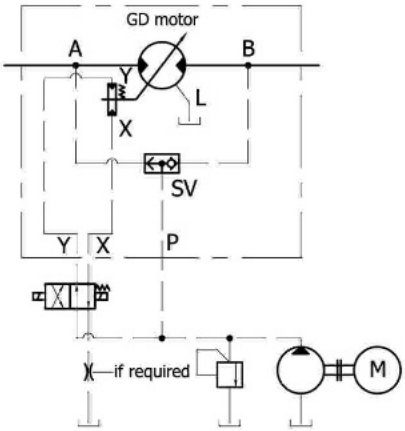

Internal pilot supply
(with shuttle valve SV included
and external boost pressure supply)

SMALL DISPLACEMENT/FREEWHEELING OPERATION

Selecting a GD series hydraulic motor with a minimum displacement very small (31 cc), the motor can run without load at high speed, resulting in a minimum motor torque requirement. The motor ports must be connected together (refer to the following diagram) and must be supplied with an external pressure/flow source.

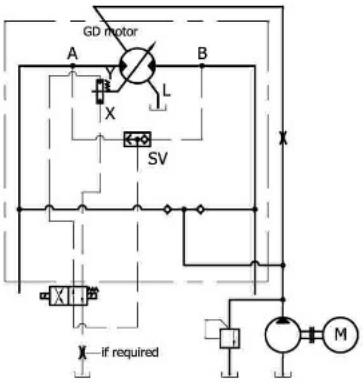

Freewheeling circuit
(GD series)

Selecting a G series hydraulic motor, the following circuit represents the best choice for freewheeling operation. The motor works under vacuum conditions, therefore it can work several hours without causing any damage and overheating. The switch from normal operation (and viceversa) must be done at low speed and pressure. Consult Italgroup technical department to obtain more details.

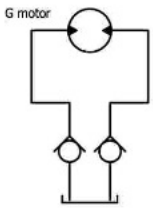

Freewheeling circuit
(G series)

Italgroup® HYDRAULIC MOTORS ITALY

When the motor is running at high speed, a minimum pressure must exists at the motor ports (see boost pressure paragraph), but in all cases this pressure must not exceed the maximum working pressure reported in the zero displacement code motor technical data. A crankcase flushing flow is highly recommendend in freewheeling operation, to control and reduce the motor temperature rise during the freewheeling. If the motor running speed is between 1000 and 2500 rpm, a 10 l/min (indicative value) flushing flow is compulsory.

BEARINGS

The bearing life depends by different factors, like bearing type, motor speed, working pressure, external loads, duty cycle, fluid viscosity, cleanless, type and temperature.
Lifetime is measured by L_{10} which is called "theoretic lifetime". It represents the number of cycles that 90% of identical bearings can effort at the same load without showing wear and tear. It is calculated by the following equation:

$$L_{10} = \left(\frac{C}{P}\right)^p$$

where: C = theoretical dynamic coefficient (depending on the bearing size)
P = radial load
p = exponent (p=3 for ball bearings, p=10/3 for roller bearings)

When you work at constant speed, you can calculate the lifetime in hours with the following equation:

$$L_{10h} = \frac{10^6 \cdot L_{10}}{60 \cdot rpm} = \frac{10^6}{60 \cdot rpm}\left(\frac{C}{P}\right)^p \text{ [h]}$$

When you don't have only radial or axial loads, you have to calculate an equivalent load:

$$P = X \cdot F_R + Y \cdot F_A$$

Where F_R = radial load,
X = radial coefficient,
F_A = axial load,
Y = axial coefficient

While F_R and F_A come from working conditions (i.e. torque), X and Y depend on the type of bearing and on the ratio $\frac{F_A}{F_R}$.

L_{10} is a theorical value, that must be corrected to take into account other important parameters, that in most applications are very difficult to estimate.

Motor	Bearing medium diameter
G 20-27-34	45 mm
G 50-75-90-100	50 mm
GD 100	50 mm

Starting from the L_{10} or L_{10h}, that are theoretical values, you can obtain a more accurate bearing lifetime estimation, supposing that the oil has a very low contamination level (refer to hydraulic fluid recommendation), using the following formula:

$$L_{na} = a_v L_{10} / f_s$$

a_v is the viscosity factor, and can be estimated referring to the following diagram, whereas f_s is the service factor, that is dependent by the duty cycle (refer to the service factor table).

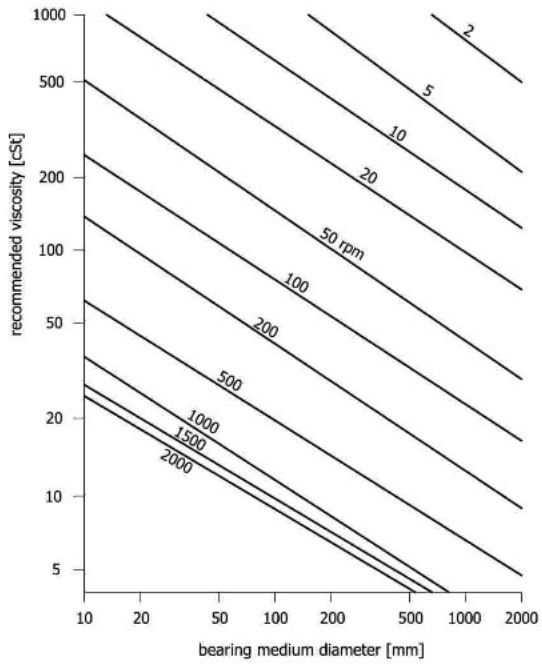

Continuous working duty cycle	Service factor (f_s)
< 6 h	1.2
< 12 h	1.4
< 24 h	2.8

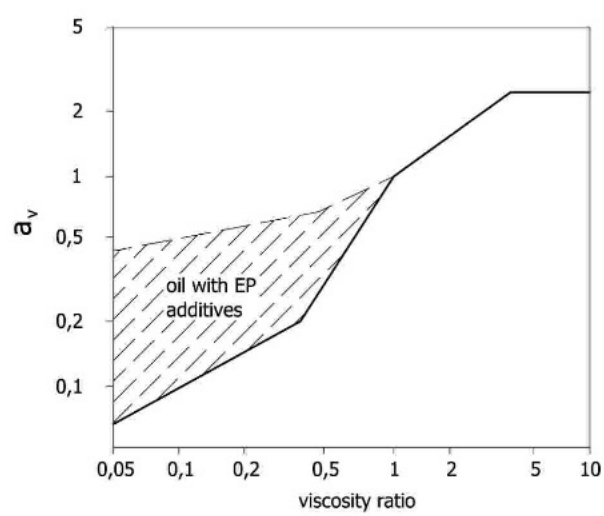

For further information, please contact our technical department.

Italgroup®
HYDRAULIC MOTORS
ITALY

FLUSHING

FLUSHING FLOW

Cooling flow is necessary to assure the minimum oil viscosity and depends by motor displacement. On radial piston hydraulic motors with high volumetric efficiency, and therefore Italgroup G and GD series, there can be a phenomenon of oil-overheating in the body motor. In fixed applications, for example, where the motor is running constantly for 8 or more hours a day (like injection machines for plastic materials, press, bending machines, etc.) high volumetric efficiency can create temperature increasing in motor body. In this case temperature increasing is to be avoided with the use of flushing. Flushing consists in carrying fresh oil (taken from hydraulic circuit) in the body motor. Oil is usually taken from return line to avoid any loss of efficiency. In this way, all internal parts of the motor are protected with this lubrication and cooled with fresh oil, so that total efficiency is optimised.

In the following table you can find an indicative value for G and GD series. The required flushing flow must always be set to assure that the oil viscosity is equal or higher than the recommended value.

Motor	Flushing flow [l/min]
G 20-27-34	3
G 50-75-90-100	5
GD 100	3÷5

FLUSHING IN PERFORMANCE DIAGRAMS

Please contact Italgroup technical department to obtain the performance diagrams.

Italgroup®
HYDRAULIC MOTORS
ITALY

DRAIN RECOMMENDATIONS

Motor axis horizontal

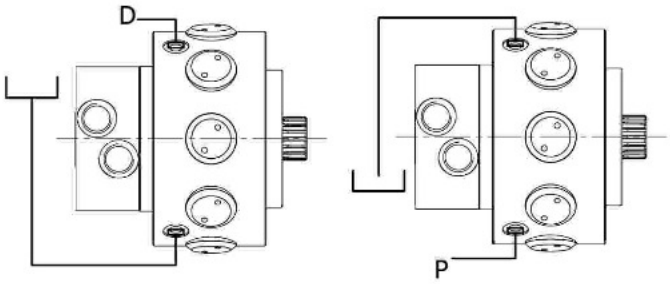

Axis vertical, shaft up

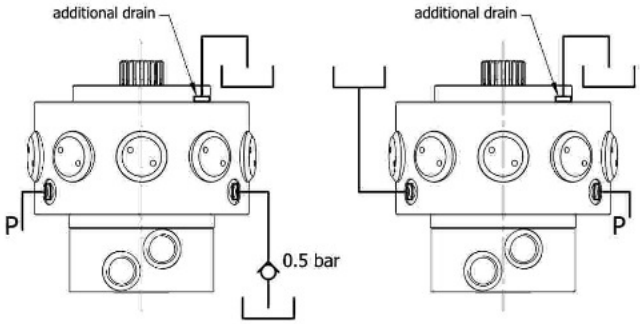

Axis vertical, shaft down

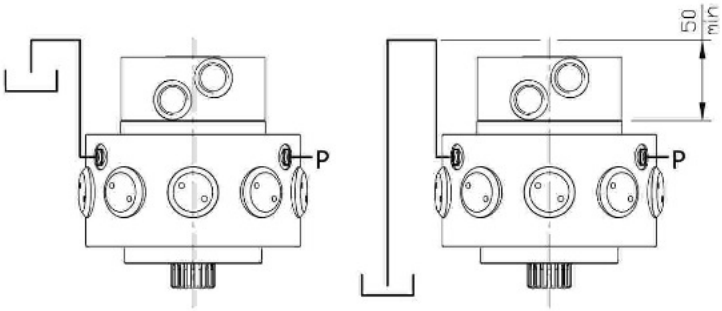

P=plug D=drain

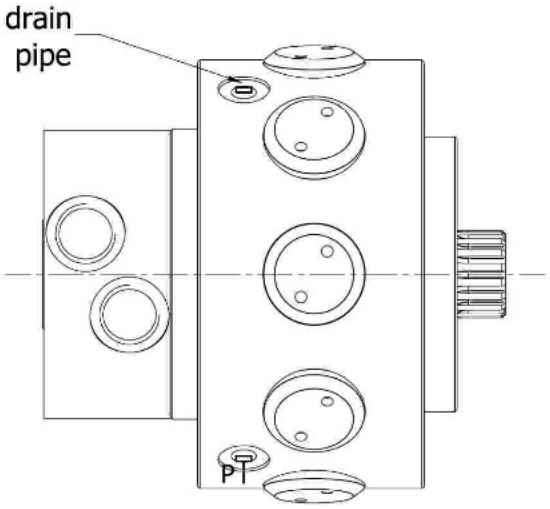

IMPORTANT

For all motors G/GD series, it is necessary TO FILL the motor case with hydraulic fluid, through the drain pipe, before start-up.

Italgroup®
HYDRAULIC MOTORS
ITALY

SHAFT SEAL FEATURES

Type: BABSL
Form: AS DIN 3760
Material: SIMRIT® 72 NBR 902
SIMRIT® 75 FKM 595

1. Features

SIMMERRING® radial shaft seal with rubber covered O.D., short, flexibility suspensed, spring loaded sealing lip and additional dust lip: see Part B/ SIMMERRING®, sections 1.1 and 2.

2. Material

Sealing lip and O.D.:

- Acrylonitrile-butadiene rubber with 72 Shore A hardness (designation: SIMRIT® 72 NBR 902)
- Fluoro rubber with 75 Shore A hardness (designation: SIMRIT®75 FKM 595)

Metal insert:

- Plain steel DIN 1624

Spring:

- Spring steel DIN 17223

3. Application

For sealing pressurised media without additional backup ring, e. g. for rotational pressure sealing in hydraulic pumps, hydraulic motors, hydrodynamic clutches. Rubber covered O.D. assures sealing in the housing bore even in case of considerable surface roughness, thermal expansion or split housing.
Particularly suitable for sealing low viscosity and gaseous media.
Where high thermal stability and chemical resistance are required, SIMRIT® 75 FKM 595 material should be used.
Additional dust lip to avoid the entry of light and medium dust and dirt.

4. Operating conditions

See Part B/ SIMMERRING®, sections 2. 4.

Media:	mineral oils, synthetic oils	
Temperature:	-40°C to +100°C	(SIMRIT® 72 NBR 902)
	-40°C to +160°C	(SIMRIT® 75 FKM 595)
Surface speed:	up to 5 m/s	
Working pressure:	see diagram 1	

Maximum permitted values, depending on other operating conditions.

5. Housing and Machining Criteria

See Part B/ SIMMERRING®, sections 2.

Shaft:	Tolerance:	ISO h11
	Concentricity:	IT 8
	Roughness:	Ra=0.2-0.8 µm Rz=1-4 µm Rmax=6 µm
	Hardness:	45-60 HRc
	Roughness:	non oriented; preferably by plunge grinding
Housing:	Tolerance:	ISO H8
	Roughness:	Rmax<25 µm

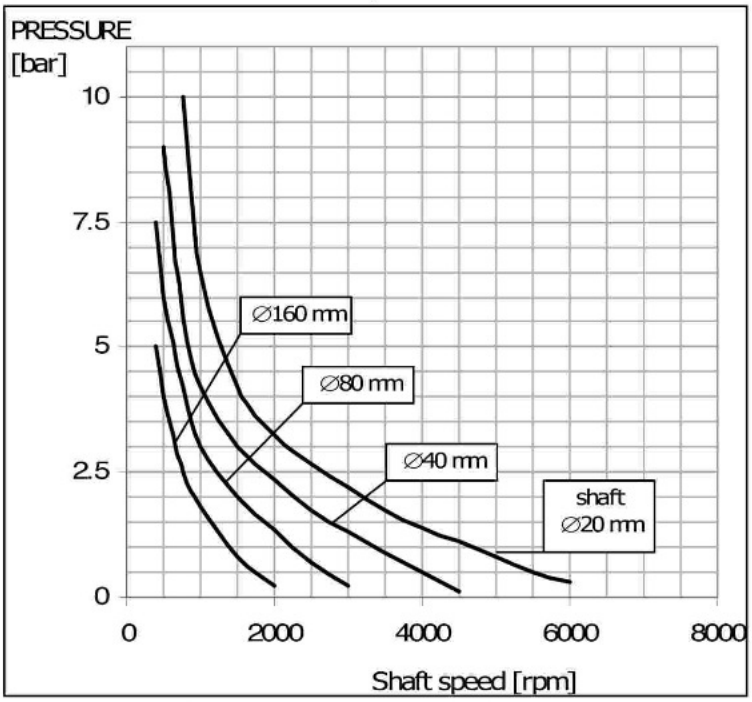

Diagram 1: Pressure Loading Limits

Italgroup®
HYDRAULIC MOTORS
ITALY

FORMULAS

- TORQUE (1)

$$\text{Torque} = (\text{specific torque}) \cdot (\text{pressure})$$

- TORQUE (2)

$$\text{Torque [Nm]} = \frac{\text{displacement [cc/rev]} \cdot \text{pressure [bar]}}{62.8}$$

- POWER (1)

$$\text{Power [kW]} = \frac{\text{Torque [Nm]} \cdot \text{speed [rpm]}}{9549}$$

- POWER (2)

$$\text{Power [CV]} = \frac{\text{Torque [Nm]} \cdot \text{speed [rpm]}}{7023}$$

- SPEED

$$\text{speed [rpm]} = \frac{\text{flow rate [l / min]} \cdot 1000}{\text{displacement [cc/rev]}}$$

- REQUIRED MOTOR DISPLACEMENT

$$\text{displacement [cc/rev]} = \frac{\text{max required torque [Nm]} \cdot 62.8}{\text{max pressure [bar]}}$$

- REQUIRED PUMP FLOW RATE

$$\text{flow [l/min]} = \frac{\text{displacement [cc / rev]} \cdot \text{max speed [rpm]}}{1000}$$

CONVERSIONS

LENGTH	1 m	=	39.3701	in
		=	3.2808	ft
		=	1.0936	yd
		=	1000	mm
	1 in	=	0.0833	ft
		=	25.4	mm
	1 ft	=	0.3048	m
		=	0.3333	yd
		=	12	in
	1 yd	=	0.9144	m
		=	3	ft
		=	36	in
	1 km	=	1000	m
		=	1093.6	yd
		=	0.6214	mile
	1 mile	=	1.609	km
		=	1760	yd
MASS	1 kg	=	2.2046	lb
	1 lb	=	0.4536	kg
SPEED	1 m/s	=	3.6	km/h
		=	2.237	mph
		=	3.2808	ft/s
	1 km/h	=	0.2778	m/s
		=	0.6214	mph
		=	0.9113	ft/s
	1 mph	=	1.609	km/h
		=	0.447	m/s
		=	1.467	ft/s
	1 ft/s	=	0.3048	m/s
		=	1.0973	km/h
		=	0.6818	mph
FORCE	1 N	=	0.102	kgf
		=	0.2248	lbf
	1 kgf	=	2.205	lbf
		=	9.806	N
	1 lbf	=	0.4536	kgf
		=	4.448	N
PRESSURE	1 bar	=	14.223	psi
		=	0.99	atm
		=	1.02	ata
		=	100000	Pa
		=	100	kPa
		=	0.1	MPa
	1 psi	=	0.0703	bar
FLOW	1 l/min	=	0.264	gpm
		=	1000	cc/min
	1 gpm	=	3.785	l/min
		=	3785	cc/min
	1 m^3/s	=	60000	l/min
		=	15852	gpm
VOLUME	1 m^3	=	1000	l
	1 l	=	61,023	in^3
		=	0,264	galUS
	1 in^3	=	0,01639	l
		=	16,39	cm^3
		=	0,004326	galUS
	1 galUS	=	3,7879	l
		=	231,15	in^3
POWER	1 kW	=	1.341	HP
		=	1.3596	CV
	1 HP	=	0.7457	Kw
		=	1.0139	CV
TORQUE	1 Nm	=	0.102	kgm
		=	0.7376	lbf ft
	1 kgm	=	9.806	Nm
		=	7.2325	lbf ft
	1 lbf ft	=	0.1383	kgm
		=	1.3558	Nm

Italgroup®
HYDRAULIC MOTORS
ITALY

TECHNICAL DATA G

MODEL		G 20	G 27	G 34	G 50	G 75	G 90	G 100
Displacement	cc/rev	20,5	27,3	34,2	50,9	76,3	89	102
Specific Torque	Nm/bar	0,32	0,43	0,54	0,81	1,21	1,41	1.61
Max cont. Pressure	bar	250	250	250	250	250	250	250
Max int. Pressure	bar	280	280	280	280	280	280	280
Peak pressure	bar	350	350	350	350	350	350	350
Max continuous speed	rpm	2400	2400	2400	2300	2150	2000	1900
Peak speed	rpm	2500	2500	2500	2400	2300	2200	2200
Minimum speed	rpm	40	35	30	25	20	15	10
Dry weight	kg	19	19	19	25	25	25	25
Max power	HP	17	24	28	42	59	71	82
	kW	12	17	21	31	44	52	60

- N° of pistons: 9
- Max case pressure: 6 bar
- Max back pressure: 70 bar
- Temperature range: -30°C ÷ +70°C

When the motor continuosly works at high power values, motor flushing is needed (see performance diagrams). The recommended flushing flow is 3 l/min (G20, G27, G34), and 5 l/min (G50, G75, G90, G100).

Italgroup®
HYDRAULIC MOTORS
ITALY

SIZE

G 20-27-34 — SINGLE DISPLACEMENT

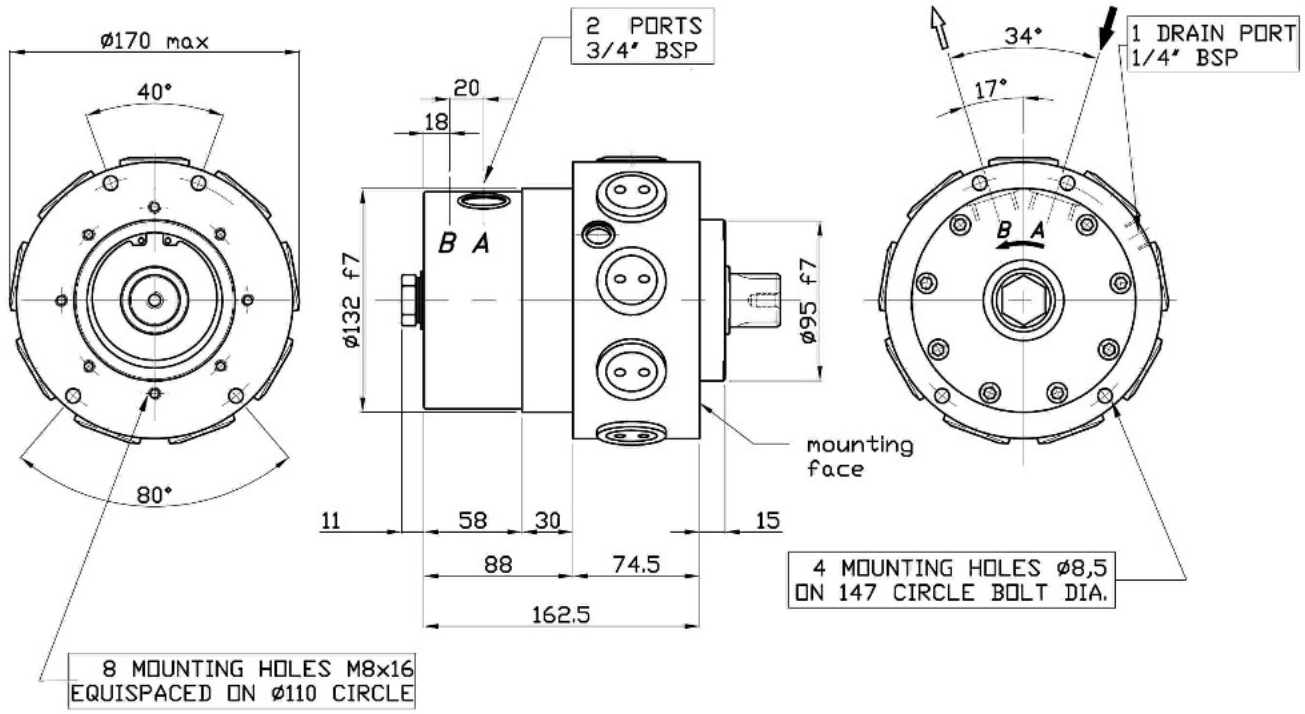

SHAFT

G 20-27-34

A0: Splined Shaft	A1: Splined Shaft	A2: Parallel shaft
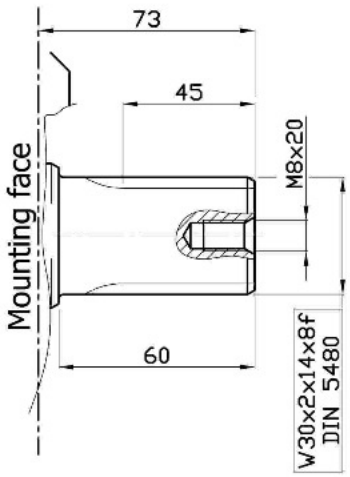	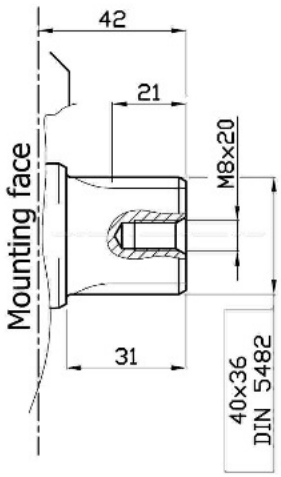	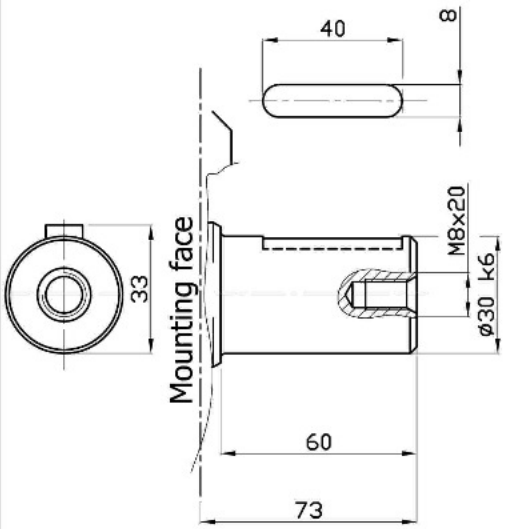

Italgroup®
HYDRAULIC MOTORS
ITALY

SIZE

G 50-75-90-100 SINGLE DISPLACEMENT

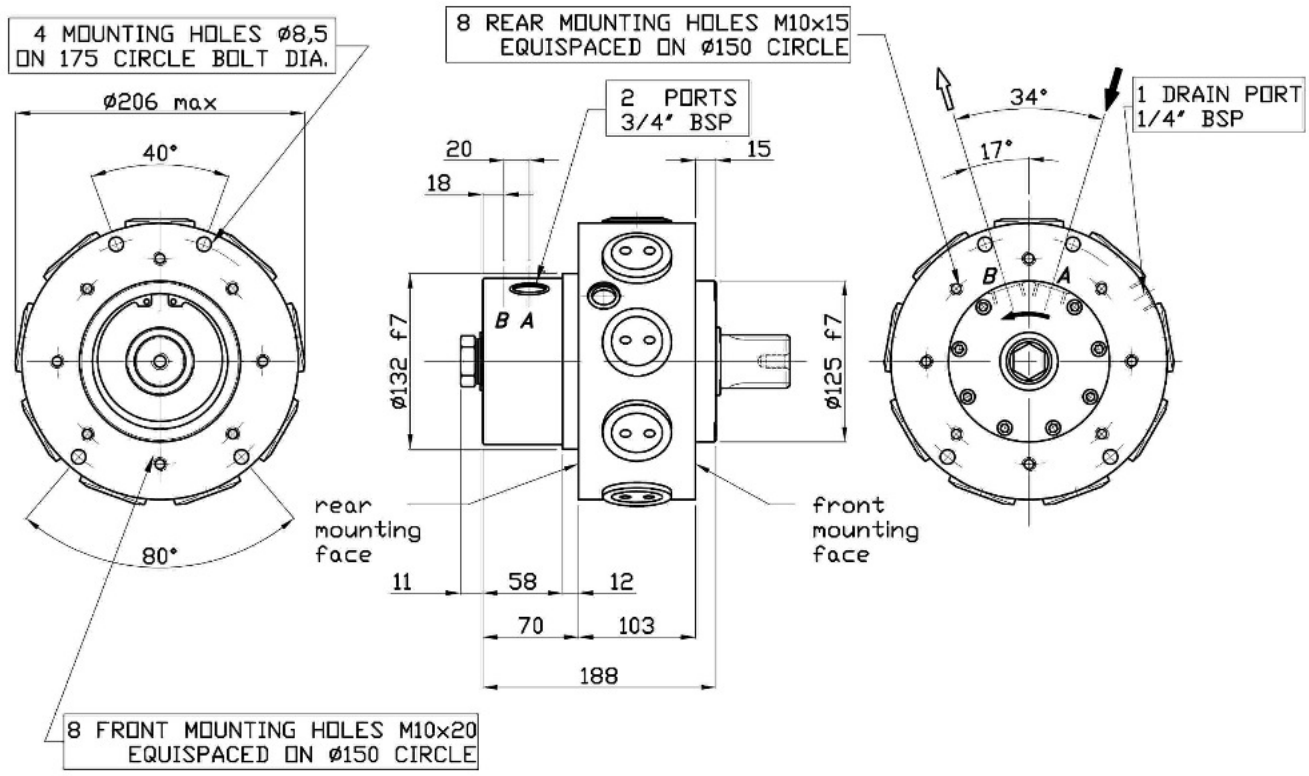

SHAFT

G 50-75-90-100

A0: Splined Shaft	A1: Splined Shaft	A2: Parallel shaft
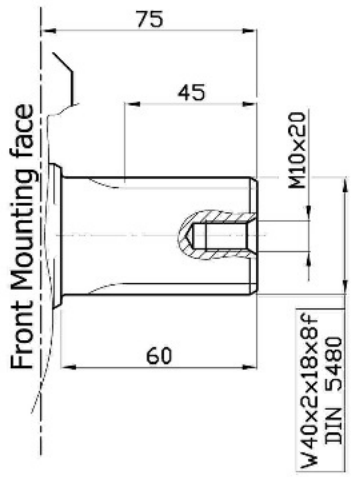	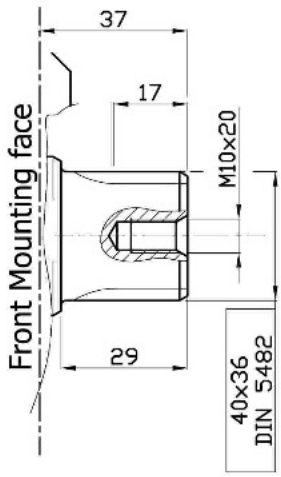	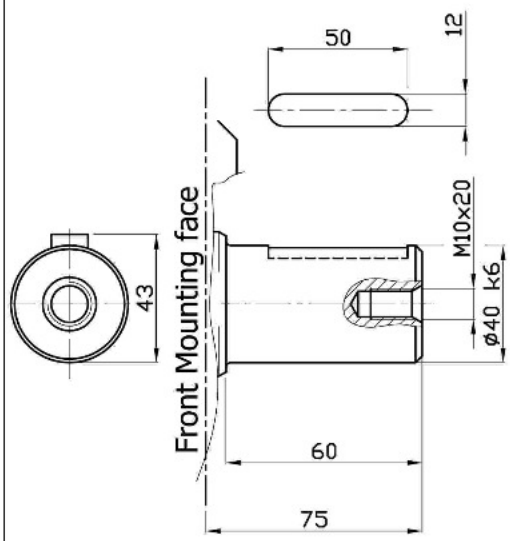

Italgroup®
HYDRAULIC MOTORS
ITALY

ORDERING INSTRUCTIONS

G - - - A - D 20 - - - SB - - -

Motor model
G

Displacement

Shaft

- A0 standard splined shaft
- A1 special splined shaft
- A2 parallel keyed shaft

Distributor

- D20 (3/4" BSP)

Tachometer (optional)

- TA
- TB
- EST
- EST.30
- J TACHOMETER PREDISPOSITION

Spline billet (optional)

- SB13 40x36 DIN 5482

Special features (optional)

- 01 (Viton seals)
- 02 (Niploy treatment on the external motor surface)
- 03 (Nitemper treatment on motor body)

EXAMPLE: G.34.A1.D20.SB13.01
G.100.A0.D20.TA

Italgroup®
HYDRAULIC MOTORS
ITALY

TECHNICAL DATA GD

DISPLACEMENT CHANGE DURING THE MOTOR FUNCTIONING

The user can choose beetween two displacements, acting on the hydraulic circuit. When the X port is at high pressure (system pressure) and the Y port is at low pressure (drain pressure), the motor functions at the maximum displacement, otherwise, when the Y port is at high pressure (system pressure) and the X port is at low pressure (drain pressure), the motor functions at the minimum displacement. When the X and Y ports are at low pressure the motor automatically switch in the maximum displacement. Please refer to "instruction and advice" section for the displacement change hydraulic circuit and to obtain more information.

DISPLACEMENTS SELECTION

Not all max and minimum displacements are possible, the displacements have a range, for the maximum displacement the customer can choose beetween 100 and 50 cc/Rev; for the minimum displacement the user can choose beetween 50 and 31 cc/Rev. In the following table are showed the technical data for some of the possible displacements.

Max displacement [cc/Rev]	100	89	76,3	63,6	50,3
Specific theoretical torque [Nm/bar]	1,61	1,41	1,21	1,01	0,81
Maximum speed [rpm]	1850	1900	2000	2100	2300
Minimum speed [rpm]	10	15	20	25	25
Mechanical efficiency [%]	89.5	89.2	89	88.5	88
Starting mechanical efficiency [%]	87	86	85	82	80
Continuous maximum power [kW]	48	42	35	31	25
Maximum power [kW]	60	52	44	39	31
Continuous maximum pressure [bar]	250	250	250	250	250
Intermittent maximum pressure [bar]	280	280	280	280	280
Peak pressure [bar]	350	350	350	350	350
Dry weight	25	25	25	25	25
Recommended flushing flow [l/min]	5	5	5	5	3

Min displacement [cc/Rev]	50,3	38	31
Specific theoretical torque [Nm/bar]	0,81	0,6	0,49
Maximum speed [rpm]	2300	2350	2400
Minimum speed [rpm]	25	30	30
Mechanical efficiency [%]	88	85	83
Starting mechanical efficiency [%]	80	75	45
Continuous maximum power [kW]	25	18	15
Maximum power [kW]	31	23	19
Continuous maximum pressure [bar]	250	250	250
Intermittent maximum pressure [bar]	280	280	280
Peak pressure [bar]	350	350	350
Dry weight	25	25	25
Recommended flushing flow [l/min]	3	3	3

When the motor continuously works at high power values, motor flushing is needed. The recommended flushing flow is shown in the above table. The values are approximated and must be always set in practice in order to guarantee a correct motor internal lubrication (please refer to page 8, flushing flow section). For closed loop circuit applications please contact Italgroup technical department.

For further information please contact Italgroup technical department.

Italgroup®
HYDRAULIC MOTORS
ITALY

SIZE

GD 100 — DUAL DISPLACEMENT

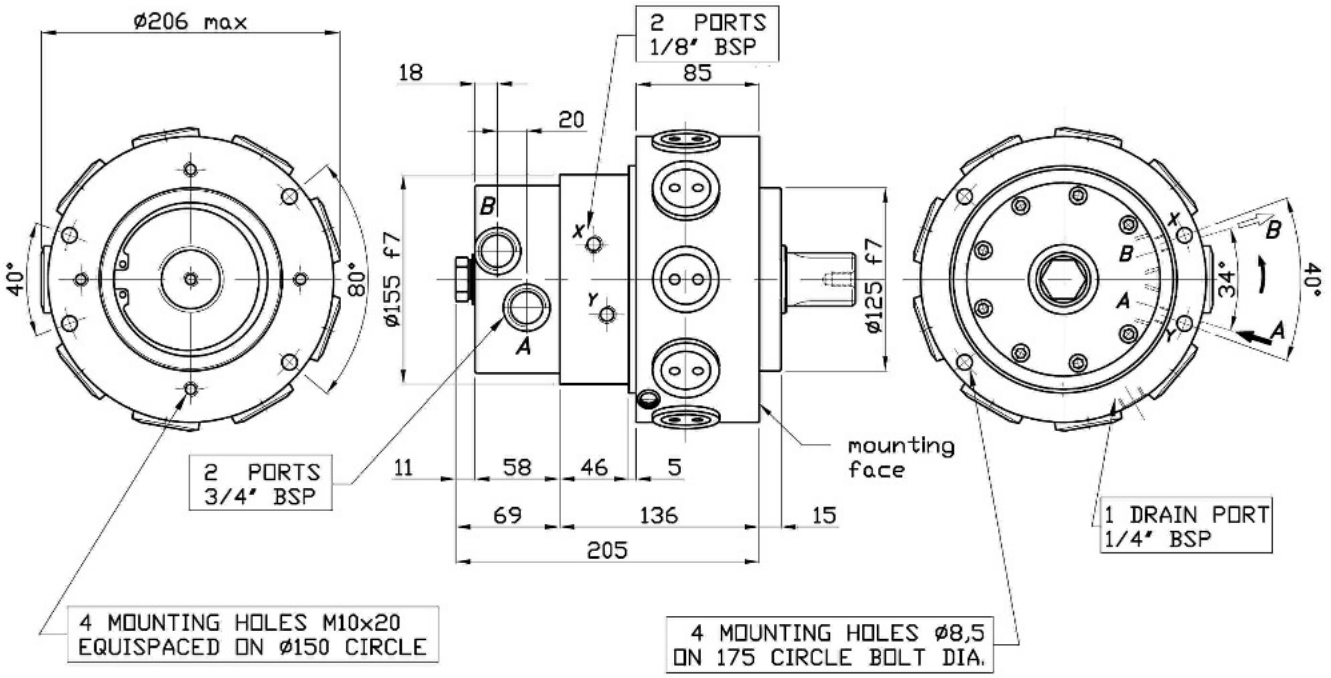

SHAFT

GD 100

A1: Splined Shaft	A2: Parallel shaft
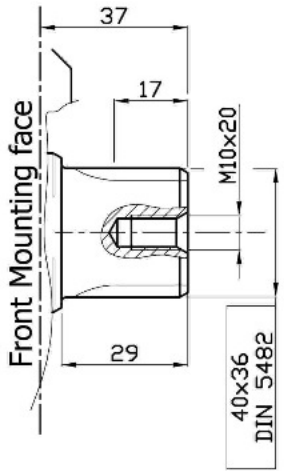	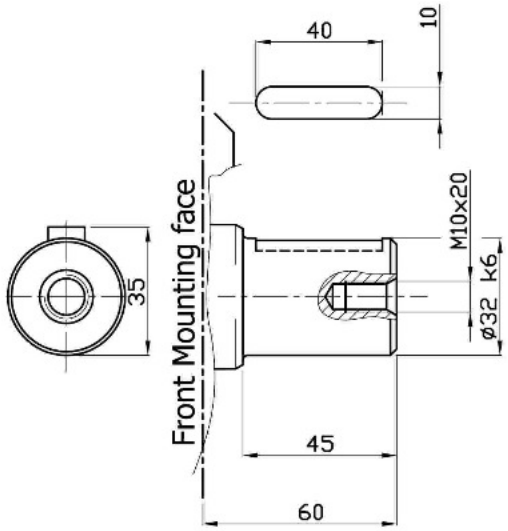

Italgroup®
HYDRAULIC MOTORS
ITALY

ORDERING INSTRUCTIONS

GD100 A - D - - - - - SB - - - - - -

Motor model
GD100

Shaft
- A1 splined shaft
- A2 parallel keyed shaft

Distributor
- D20 (3/4" BSP)

Tachometer (optional)
- TA
- TB
- EST
- EST.30
- J TACHOMETER PREDISPOSITION

Spline billet (optional)
- SB13 40x36 DIN 5482

Special features (optional)
- 01 (Viton seals)
- 02 (Niploy treatment on the external motor surface)
- 03 (Nitemper treatment on motor body)

Displacements (*)
- MAX-MIN (MAXIMUM AND MINIMUM DISPLACEMENT OF MOTOR)

(*) see page 3 for available maximum and minimum displacements

EXAMPLE:
GD100.A1.D20.02.100-38
GD100.A2.D20.TA.75-31
GD100.A1.D20.J.60-38